APPENDIX D
CHARACTERISTICS AND ANALYSIS OF FLARES

This page intentionally left blank.

APPENDIX D CHARACTERISTICS AND ANALYSIS OF FLARES

1.0 INTRODUCTION

Aircraft participating in Large Force Exercises (LFEs) often use a variety of self-protection flares in approved airspace. Self-protection flares are magnesium pellets that, when ignited, burn for 3.5 to 5 seconds at 2,000 degrees Fahrenheit. The burn temperature is hotter than the exhaust of an aircraft, and therefore attracts and decoys heat-seeking weapons targeted on the aircraft. Flares are used in pilot training to develop the near instinctive reactions to a threat that are critical to combat survival. This appendix describes flare characteristics, ejection, risks, and associated regulations.

2.0 FLARE CHARACTERISTICS

Self-protection flares are primarily mixtures of magnesium and Teflon (polytetrafluoroethylene) molded into rectangular shapes (United States Air Force [Air Force] 1997). Longitudinal grooves provide space for materials that aid in ignition. Typically, flares are wrapped with an aluminum-coated mylar or filament-reinforced tape (wrapping) and inserted into an aluminum (0.03 inches thick) case that is closed with a felt spacer and a small plastic end cap (Air Force 1997). The top of the case has a pyrotechnic impulse cartridge that is activated electrically to produce hot gases that push a piston, the flare material, and the end cap out of the aircraft into the airstream.

The B-1 uses MJU 23 A/B flares and the B-52 uses ALA-17 A, B, or C flares. The F-16 uses M-206 and MJU-7 A/B flares. F-22 uses MJU-10/B flares. The F-15 uses either the MJU-10/B or MJU-7 A/B flare. Table 1 presents the types of aircraft and flares which could be normally expected during in the Powder River Training Complex (PRTC). There are three types of ignition mechanisms for self-protection flares: non-parasitic, parasitic, and semi-parasitic. The non-parasitic flare is discharged from the aircraft before ignition. The parasitic flare ignites inside the tube within the aircraft and is discharged already burning. The semi-parasitic flare is thrust out of the case by a firing mechanism that also begins the flare ignition process. Both the MJU-10/B and MJU-7 A/B are semi-parasitic flares.

Figure 1 is a drawing of a simple M-206 flare. It is 1 inch wide, 1 inch high, and 8 inches long. When the firing device is electronically triggered, gas pressure pushes the small nylon or plastic piston. A hole extends through the piston and concurrently starts the flare burning. The piston pushes the flare out of the casing, pops off the plastic end cap, splits the wrapping material, and deploys the flare. Figure 2 presents an M-206 countermeasure flare and the aluminum case, which stays in the aircraft.

Table 1. Typical Self-Protection Flares Used for Training in ACC-scheduled Airspace

Attribute	***ALA-17***	***M-206***	***MJU-7 A/B***	***MJU-10/B***	***MJU-23/B and A/B***
Aircraft	B-52, AC-130	A-10, F-16, C-130, C-17	F-16, F-15, C-130	F-15, F-22	B-1B
Mode	Parasitic	Parasitic	Semi-parasitic	Semi-parasitic	Non-parasitic
Configuration	2 cylindrical cartridges in series	Rectangular	Rectangular	Rectangular	Cylindrical
Size	Each cylinder 4.75x2.25 inches (diameter)	1x1x8 inches (8 cubic inches)	1x2x8 inches (16 cubic inches)	2.66x2x8 inches (42.6 cubic inches)	10.5x2.75 inches (diameter) (90.7 cubic inches)
Impulse cartridge	None; electrically activated M-2 squib	M-796	BBU-36/B	BBU-36/B	BBU-46/B
Safety and Initiation (S&I) Device	None	None	Slider assembly	Slider assembly	Slider assembly with ignition charge
Weight (nominal)	Pellet: 18 oz Canister: 10 oz	6.9 ounces	13 ounces	40 ounces	43 ounces
Other Comments	Canister ejected with first unit	None	None	None	None

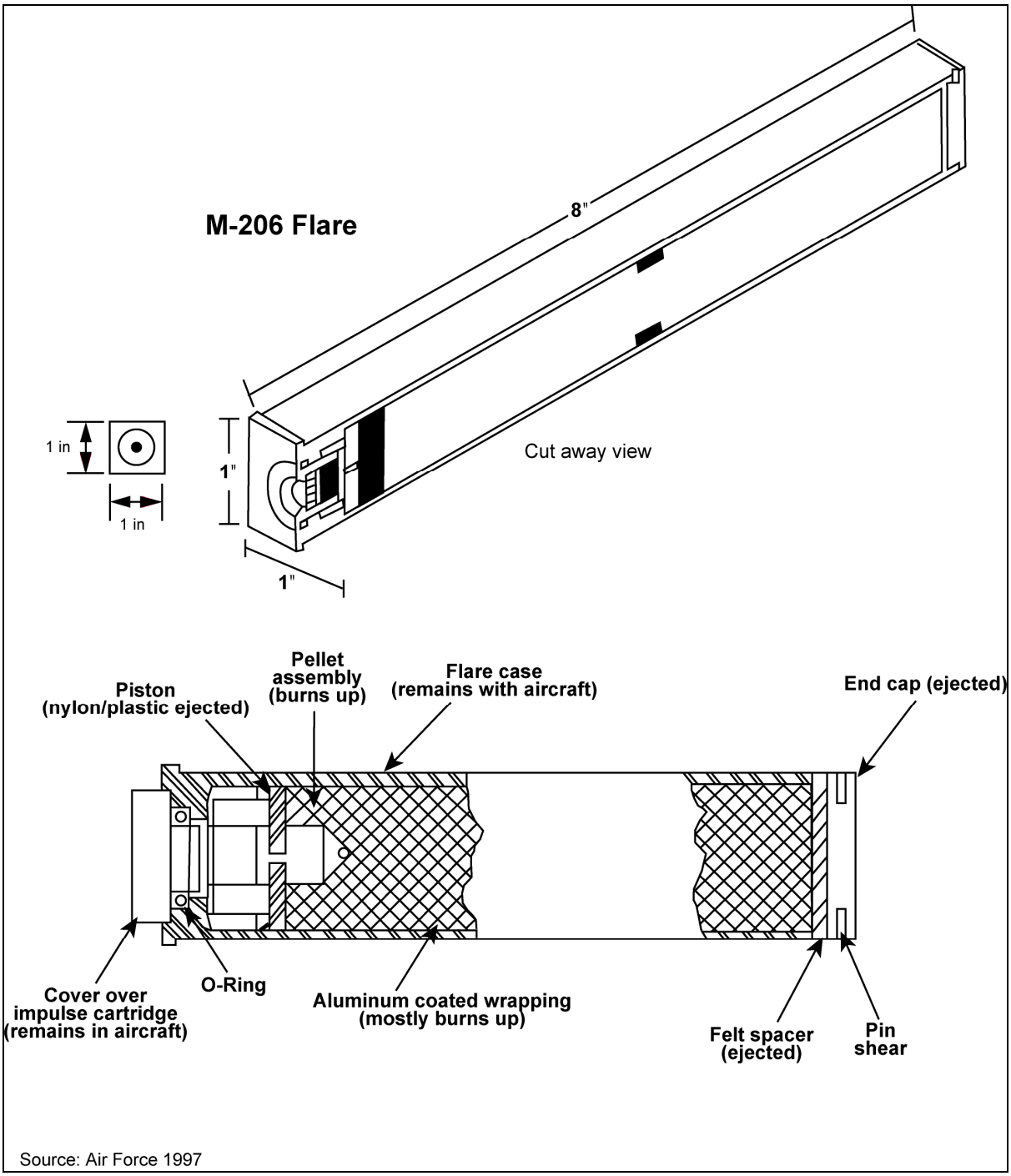

Figure 1. M-206 Flare

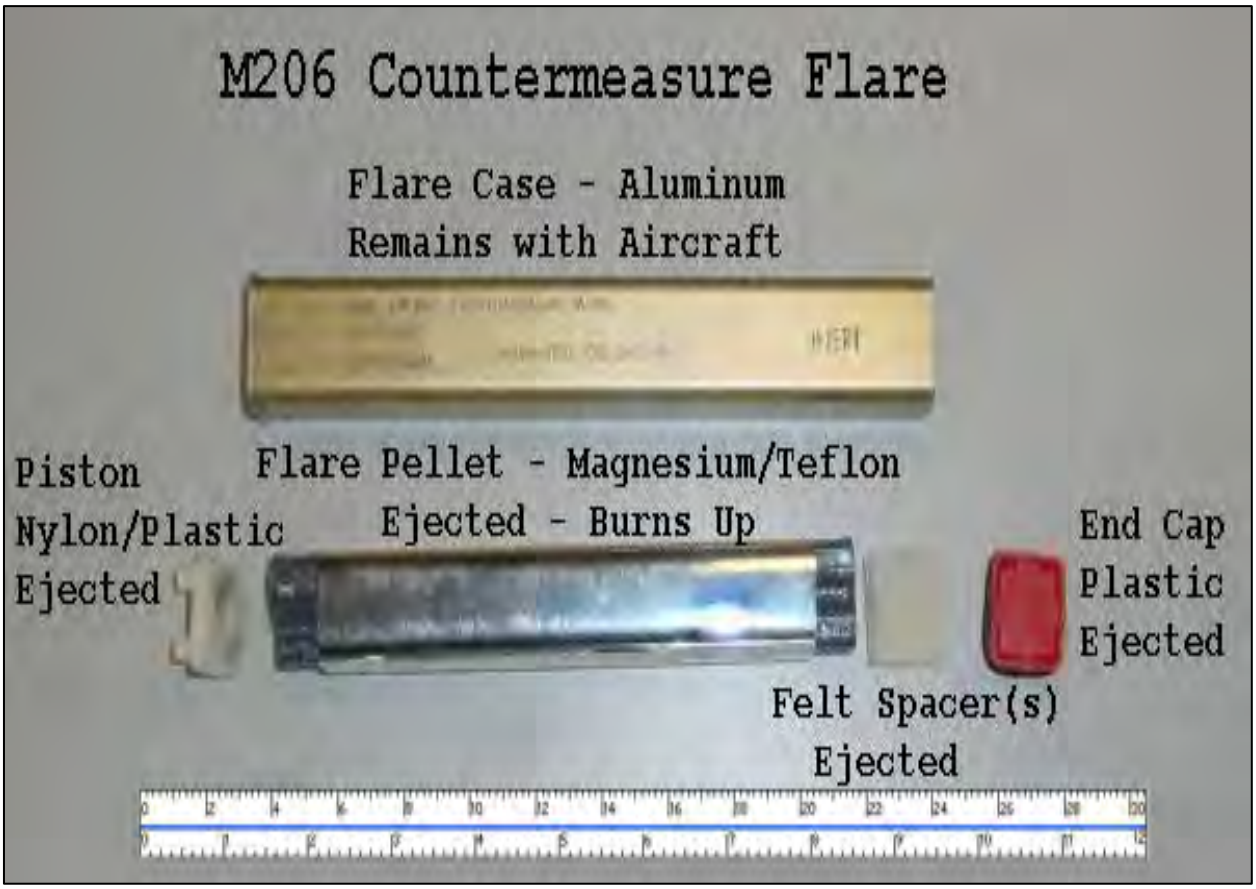

Figure 2. M-206 Countermeasure Flare

A flare may be compared to a muzzle-loading rifle. There is a firing cap, a powder charge, wadding between the charge and the bullet, and a wad at the end that keeps everything in place. The electrical firing "cap" creates a gas that ejects the plastic or nylon slider, 2 felt spacers that hold everything in place, and the end cap. The "bullet" is a magnesium/Teflon flare pellet that is ejected and burns up in 4 to 5 seconds.

B-1 and B-52 flares would be used during training exercises in PRTC training airspace. The B-1B uses the MJU-23/B flare as noted in Table 1. The MJU-23/B, shown in Figure 3 is a non-parasitic cylindrical flare used only on the B-1B aircraft. It is 10.5 inches long and 2.75 inches in diameter. Figure 4 is a photograph of the parts of the MJU 23/B flare. The MJU-23/B flare includes the same S&I device as the semi-parasitic MJU-7 A/B flare. The MJU-23/B has a plastic end cap with 0.5 inches of black rubber potting compound designed to absorb the shock of hitting spring-loaded doors on the aircraft. The earlier MJU-23/A used an aluminum piston and included strips of felt spacers on the side and circular felt spacers in the cylinder. The newer MJU-23/B replaces the aluminum with a plastic piston, retains circular felt spacers, and reduces the side felt spacer strips. The MJU-23/B uses the BBU-46/B impulse cartridge. The MJU-23A/B B1 bomber flare expels, along with the magnesium/Teflon flare pellet, other non-flare residual materials. Residual materials for the MJU-23A/B include two felt pads, a tin closure cap, a plastic/nylon end cap, and a piston with a Safe and Initiation (S&I) system attached. In most flare deployments, the aluminum wrap around the magnesium pellet will be burned and blown off when the flare ignites upon exiting the flare's case.

The B-52 uses the ALA-17 A/B flare as noted in Table 1. A drawing of the ALA-17A/B flare is presented in Figure 5. The flare consist of two independently fired aluminum cylinders, each 4.75 inches long and 2.25 inches in diameter, crimped together end-to end. The ALA-17 A/B flare with the two cylinders is 9.5 inches long, 2.25 inches in diameter, and from the outside, looks similar to the MJU-23/B flare (Figure 4). When the top cylinder is fired, the flare pellet is ejected from the aircraft, along with the entire bottom cylinder. Impulse cartridges are not used; the flares are fired directly with an electrically activated squib set in potting compound. The M-2 squib weights about 0.0022 ounces and is composed of 40 percent potassium chlorate, 32 percent lead thiocyanate, 18 percent charcoal, and 10 percent Egyptian lacquer (Global Security 2008). Both the upper and lower flare case will expel an aluminum end cap and plastic piston. Both the upper and lower flare are deployed and ignited by the impulse cartridge. Therefore, there is no S&I device in either the upper or lower flare cartridge case. The newer ALA-17 C flare has upper and lower flare cylinders both contained in one aluminum housing, depicted in the cutaway Figure 6. Both the upper and lower flares are wrapped in aluminum tape and possess individual deployment and ignition systems. A plastic end cap and S&I system are deployed with the individual flare pellets. The lower flare's expended impulse cartridge and aluminum housing/mid-spacer are expelled by deployment of the upper flare. The ALA-17C model full aluminum housing remains in the B-52 dispenser rack.

Figure 7 is a drawing of an MJU-7 A/B flare. The MJU-7 A/B is a semi-parasitic flare which contains a charge that is ignited as the flare is ejected from the aircraft. The MJU-7 A/B is 2 inches wide, 1 inch high, and 8 inches long. The MJU-7 A/B is similar to the M-206, with a flare pellet, a nylon or plastic slider (or piston), felt spacers, and an end cap. In addition, the MJU-7 A/B contains a safe and initiation (S&I) device which is ejected with flare deployment. The S&I device provides for the ignition and also splits open the wrapping as the flare exits the aircraft. Figure 8 presents a cutaway view of all parts of the MJU-7 A/B flare.

The flare used by the F-22 is the MJU-10/B flare. Figure 9 is a drawing of the MJU-10/B flare. The primary difference between the MJU-7 A/B and the MJU-10/B flare types is that the MJU-10/B flare is twice as large as the MJU-7 A/B. Table 2 provides a summary description of the M-206, MJU-7 A/B, and MJU-10/B flares. The M-206 contains a flare pellet of approximately 7 cubic inches. The MJU-7 A/B flare pellet is approximately 14 cubic inches and the MJU-10/B flare pellet is approximately 36 cubic inches. Table 3 presents the typical composition of F-22 and F-15 defensive flares. The flares are expelled from the flare cartridges with a BBU-36/B impulse charge. Table 4 presents the components of this impulse charge.

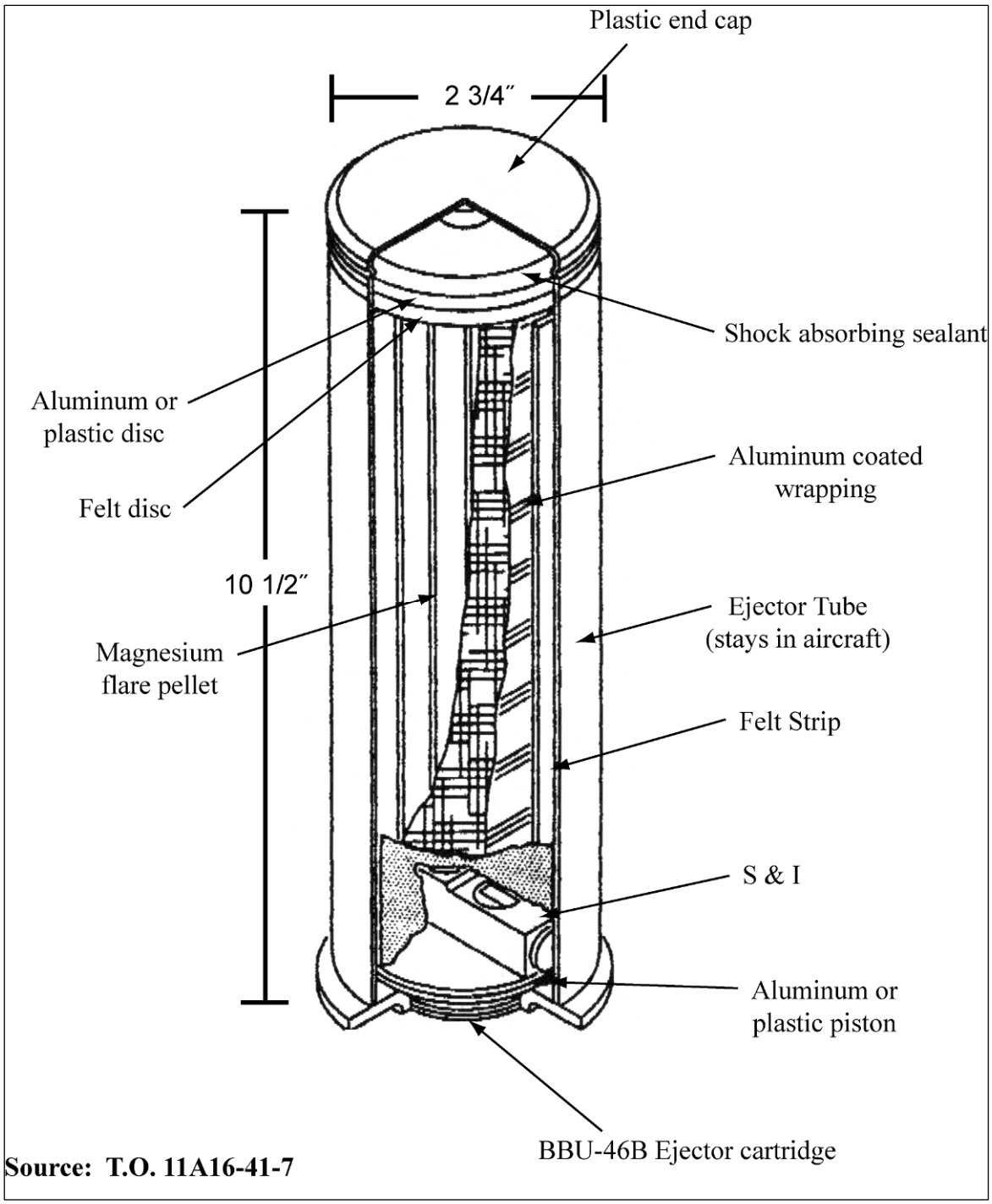

Source: T.O. 11A16-41-7

Figure 3. MJU-23/B Flare Used by B-1B Aircraft

Figure 4. MJU-23 Flare

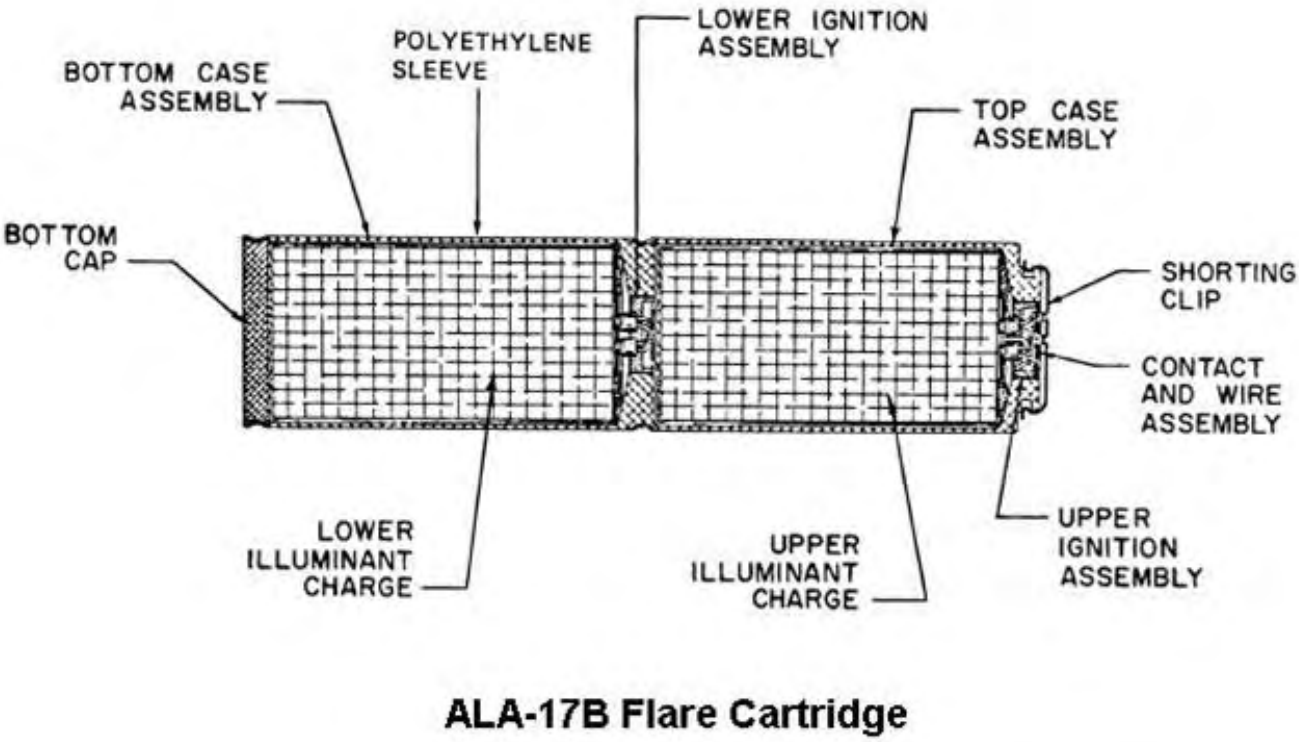

Figure 5. ALA-17 Flare Cartridge

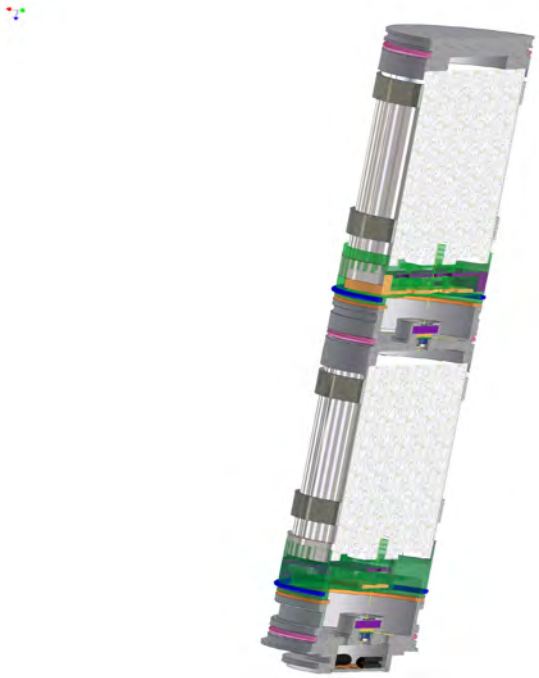

Figure 6. ALA-17 Cutaway

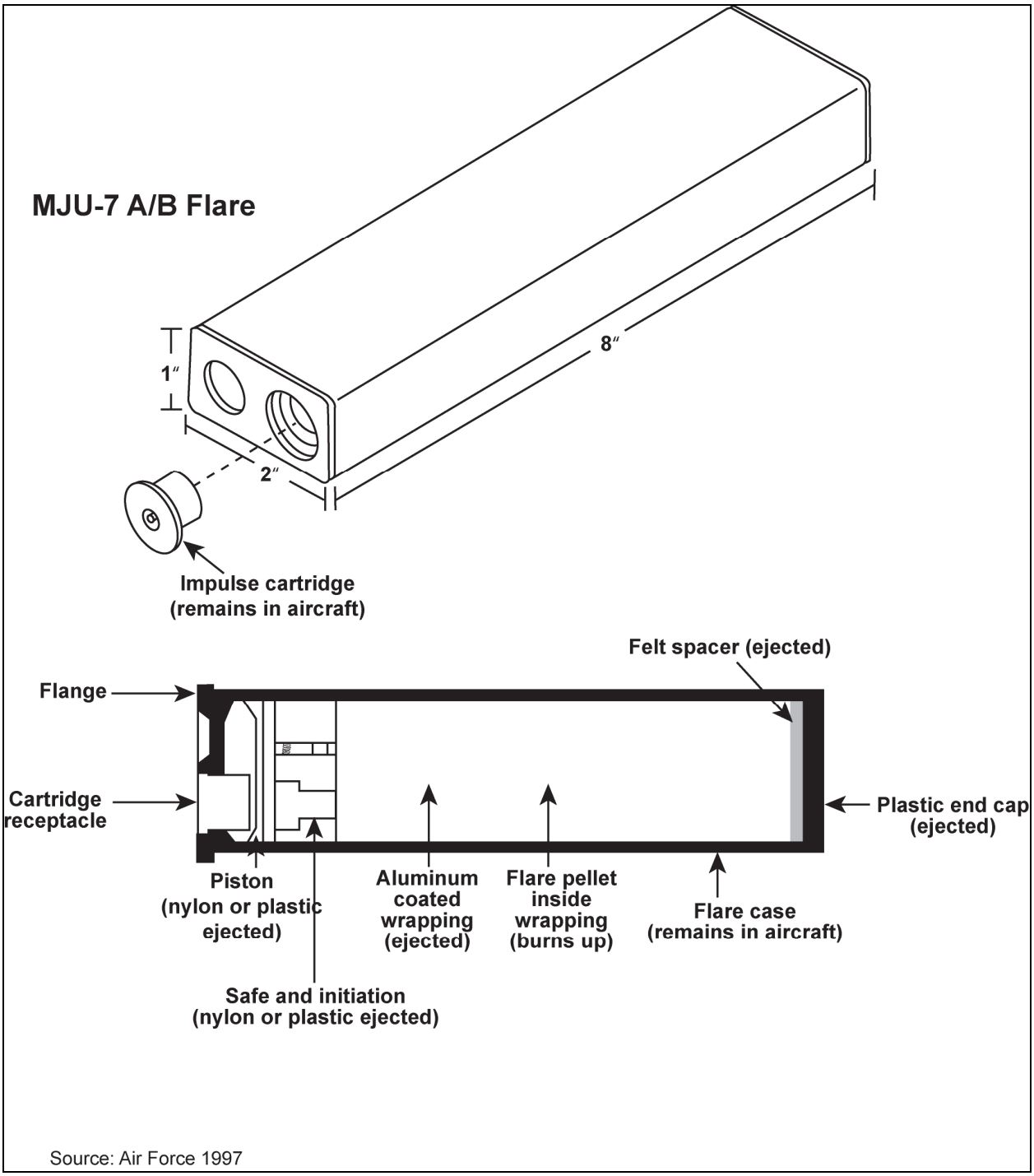

Source: Air Force 1997

Figure 7. MJU-7 A/B Flare

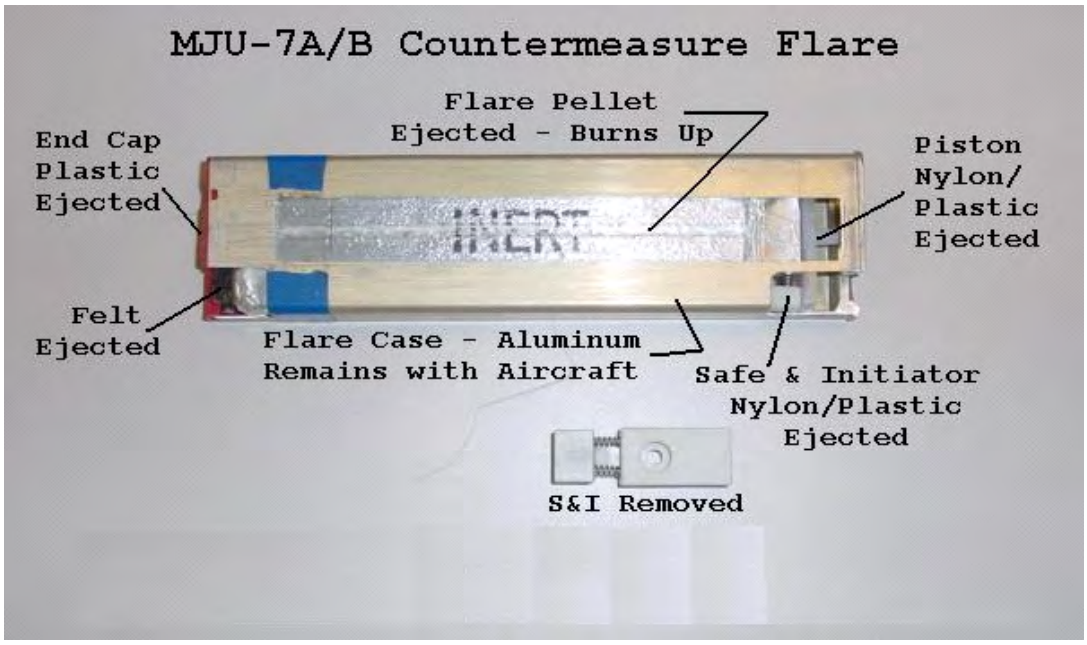

Figure 8. MJU-7 A/B Countermeasure Flare (cut away view)

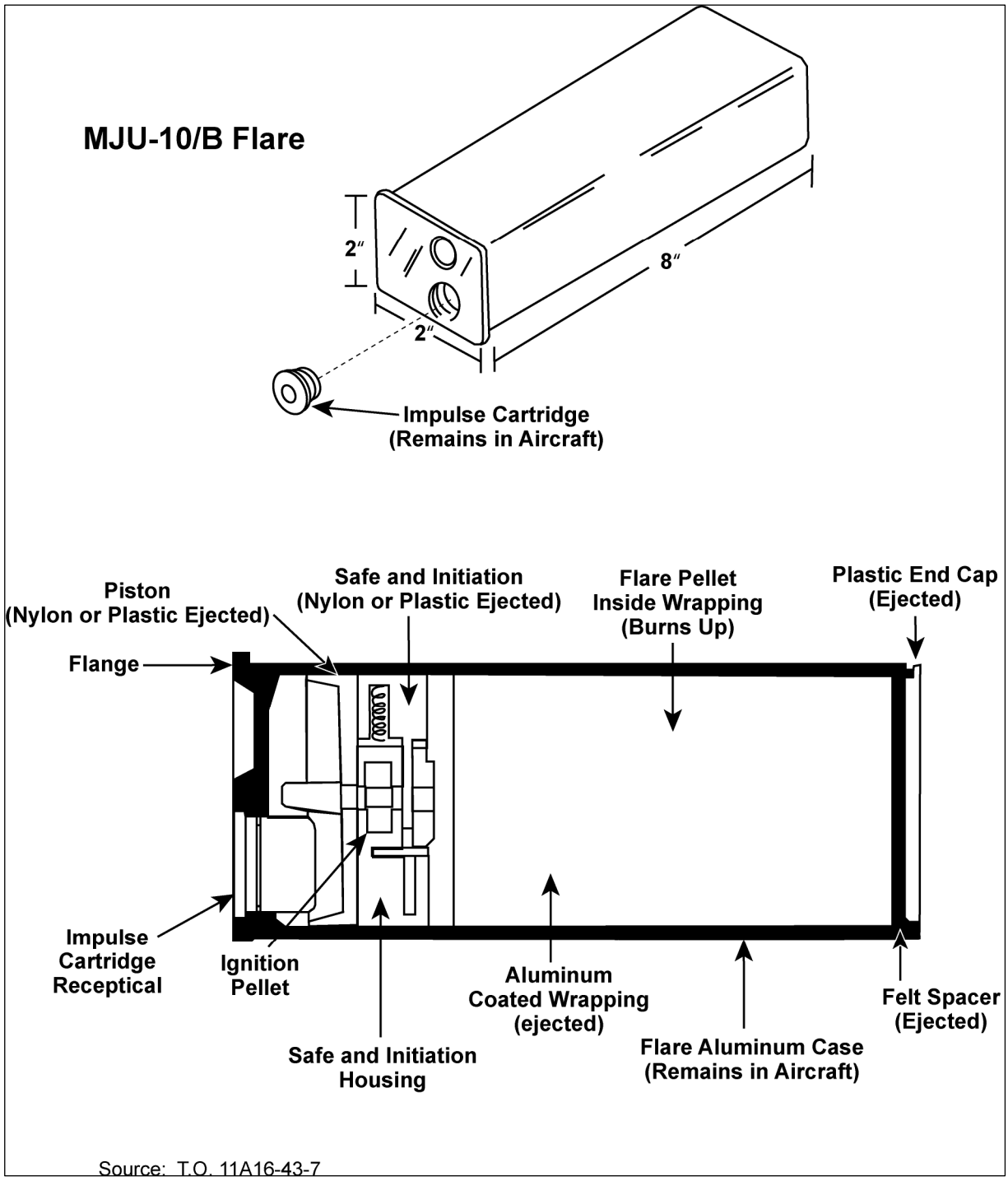

Figure 9. MJU-10/B Flare

Table 2. Description of M-206, MJU-7 A/B, and MJU-10/B Flares

Attribute	***M-206***	***MJU-7 A/B***	***MJU-10/B***
Aircraft	F-16, A-10, AC-130, C-17	F-15, F-16, AC-130	F-15, F-22
Mode	Parasitic	Semi-parasitic	Semi-parasitic
Configuration	Rectangle	Rectangle	Rectangle
Size	1x1x8 inches (8 cubic inches)	1x2x8 inches (16 cubic inches)	2x2x8 inches (32 cubic inches)
Impulse Cartridge	M-796	BBU-36/B: MJU-7	BBU-36/B
S&I Device	None	Slider Assembly	Slider Assembly
Weight (nominal)	6.8 ounces	13 ounces	40 ounces
Felt Spacers	1 to 2, 1x1 inch	1 to 2, 1x2 inches	1 to 2, 2x2 inches

Table 3. Typical Composition of MJU-10/B and MJU-7 A/B Self-Protection Flares

Part	***Components***
Combustible	
Flare Pellet	Polytetrafluoroethylene (Teflon) ($-[C_2F_4]_n$ – n=20,000 units) Magnesium (Mg) Fluoroelastomer (Viton, Fluorel, Hytemp)
First Fire Mixture	Boron (B) Magnesium (Mg) Potassium perchlorate ($KClO_4$) Barium chromate ($BaCrO_4$) Fluoroelastomer
Immediate Fire/ Dip Coat	Polytetrafluoroethylene (Teflon) ($-[C_2F_4]_n$ – n=20,000 units) Magnesium (Mg) Fluoroelastomer
Assemblage (Residual Components)	
Aluminum Wrap	Mylar or filament tape bonded to aluminum tape
End Cap	Plastic (nylon)
Felt Spacers	Felt pads (0.25 inches by cross section of flare)
Safe & Initiation (S&I) Device	Plastic (nylon, tefzel, zytel)
Piston	Plastic (nylon, tefzel, zytel)

Source: Air Force 1997

Table 4. Components of BBU-36/B Impulse Charges

Component	*BBU-36/B*
Overall Size Overall Volume Total Explosive Volume	0.740 x 0.550 inches 0.236 cubic inches 0.081 cubic inches
Bridgewire	Trophet A
Closure Disk	Scribed disc, washer
Initiation Charge	
Volume	0.01 cubic inches
Weight	100 mg
Compaction	6,200 psi
Composition	42.5 percent boron 52.5 percent potassium perchlorate 5.0 percent Viton A
Booster Charge	
Volume	0.01 cubic inches
Weight	150 mg
Compaction	5,100 psi
Composition	20 percent boron 80 percent potassium nitrate
Main Charge	
Volume	0.061 cubic inches
Weight	655 mg
Compaction	Loose fill
Composition	Hercules #2400 smokeless powder (50-77% nitrocellulose, 15-43 percent nitroglycerine)

Source: Air Force 1997

3.0 ENVIRONMENTAL EFFECTS OF FLARES

3.1 Flare Reliability

Initial concerns regarding defensive training flare use focused on questions of flare reliability, fire risk, and flare emissions. Flare reliability is important because a flare failure could have a variety of environmental consequences. Reliability is determined by testing the flares after manufacture. Flare testing consists of selecting 80 flares randomly from a lot of several thousand flares. Lot acceptance testing for the MJU-7 A/B, the most heavily used flare, examines the success of ignition and burn, pellet breakup, and indication of dispenser damage. The specification requires that a flare lot pass an ignition and ejection test. In this test, with a sample size of 80, two failures would be acceptable, but three failures would result in the entire flare lot being rejected (Air Force 1997). To ensure that good lots are not erroneously rejected in these tests, the flares would have to be designed to a reliability of 99 percent (assuming a confidence level of 95 percent). Therefore, the reliability of the MJU-7 A/B flare is expected to be approximately 99 percent. Other factors are required to achieve comparable levels of reliability. Flares are manufactured to avoid rejection of the entire lot. These levels of reliability are reasonable when the purpose of the flare is taken into consideration. A flare is designed to protect life and a multi-million dollar investment.

3.2 Flare Failures

There are four different types of flare failure. One failure would be if the flare was electrically triggered but did not release and did not burn. Such a flare would be treated as unexploded ordnance (UXO) when the aircraft returned to the base, and the flare would be removed for disposal.

A second type of flare failure would be if the flare burned but did not release from the aircraft. This would be an extremely dangerous situation for the pilot. There is one known case of this occurring; in 1980, an F-102 aircraft was destroyed and the pilot ejected. Reliability of flare ignition and deployment has been substantially improved since then.

A third type of flare failure would be a released flare at an improper altitude or that did not burn correctly. If a burning flare struck the ground, it could result in a fire, with potential environmental consequences. If a broken part of a flare struck the ground, it would not burn unless subject to temperatures or friction generating temperatures in the one to two thousand degree range.

A fourth type of flare failure is if a flare was released from the aircraft but did not burn, either in whole or part, and becomes a dud flare on the ground. There are two potential locations for a dud flare: on or off military-controlled land. Military-controlled land includes the base airfield where, at times, an unburned flare (the first type of failure) is jolted out of its container during a landing and becomes a dud flare (the fourth type of failure) on or adjacent to the runway. Military-controlled land also includes training ranges over which flares are deployed. Non-military controlled land includes lands managed by other governmental agencies and private lands.

The first type of flare failure results in an unburned flare returning to the base. This would be handled as UXO and would not normally be treated as a potential environmental impact. The second type of flare failure is an extremely rare case of a flare causing a Class A accident with loss of an aircraft and possibly a life. Such a situation would be quantified in terms of flight safety and would be part of the documented Class A accident rates for the specific aircraft. As noted above, there is only one documented case of this type of flare failure.

The third type of flare failure is a flare which is still burning when it strikes the ground. Documented cases of this have occurred. Upon investigation, such cases are nearly always the case of a flare being deployed at too low an altitude.

If a flare struck the ground while still burning, it could ignite surface material and cause a fire. This has occurred at active military training ranges where flare- or munitions-caused fires are documented. In all known cases, the flares burning when they struck the ground were released at a very low altitude. Table 5 presents the time-to-distance for a falling object, such as a flare. Release at an altitude below 300 feet has the potential for a flare that burns in 4 to 5 seconds to still be burning when it strikes the ground. On active military ranges, firebreaks are established to reduce the potential for fires to spread off the range.

The best way to reduce the risk of flare-caused fires is to establish adequate minimum altitudes for flare release. In 8 seconds, a flare would fall approximately 1,000 feet. An M-206 or an MJU-7 A/B flare is designed to burn out within 150 to 400 feet. Where flares are deployed at a minimum altitude of 1,500 feet above the ground, the likelihood of a flare-caused fire is substantially reduced. In areas where flares are used within training airspace over public or private lands, the minimum altitude for flare deployment is typically between 1,500 to 2,000 feet above ground level (AGL).

Table 5. Flare Burn-out Rate and Distance

Time (in Sec)	*Acceleration*	*Distance(in feet)*
0.5	32.2	4.025
1.0	32.2	16.100
1.5	32.2	36.225
2.0	32.2	64.400
2.5	32.2	100.625
3.0	32.2	144.900
3.5	32.2	197.225
4.0	32.2	257.600
4.5	32.2	326.025
5.0	32.2	402.500
5.5	32.2	487.025
6.0	32.2	579.600
6.5	32.2	680.225
7.0	32.2	788.900
7.5	32.2	905.625
8.0	32.2	1030.400
8.5	32.2	1163.225
9.0	32.2	1304.100
9.5	32.2	1453.025
10.0	32.2	1610.000

Note: Initial velocity is assumed to be zero.

3.3 Dud Flares

The fourth type of flare failure is a dud flare on the ground. A dud flare on nonmilitary land, either public or private land, has the potential to produce environmental consequences. United States (U.S.) military training ranges where flares are used were contacted to estimate the potential for locating a dud flare on the ground. The military has personnel experienced with UXO who survey military ranges to identify and remove live ordnance or dud flares. Experience from the Goldwater Range in Arizona

and the Utah Test and Training Range identified very few dud flares on the ground. The surveys were not scientific studies that evaluated the entire military training ranges, but did survey areas within which 95 to 99 percent of the UXO would be expected. In areas where approximately 200,000 flares had been deployed, an estimated 18 duds were found on the ground. This calculates to a ratio of approximately 1 in 10,000.

There is no instance of a dud flare or any flare debris striking an individual. A dud M-206 flare would be an approximately 3/4 pound piece of material falling at a speed of over 100 miles per hour. It is extremely unlikely that an individual could be struck by such a falling object, but if someone were, it could cause severe injury or death. Dud flares are extremely rare, but they are dangerous.

Although very few dud flares would be expected on the ground, and fewer would be expected to be found, any located dud flare should be treated as UXO. Figure 10 is approximately 40 percent of an M-206 flare and wrapping that did not burn. Apparently, during deployment, the M-206 flare pellet broke before it was completely ignited and the unburned portion was deposited on the military training range. A dud flare would probably not ignite even in a campfire unless it was on a very hot bed of coals. If a dud flare were shot with a bullet or cut with a power saw, the friction could cause it to ignite. If a dud flare were struck by an ax, it is unlikely, but possible, that an ignition could occur. Should a flare be ignited, it would burn at a temperature of 2,000°F and could result in severe injury or death.

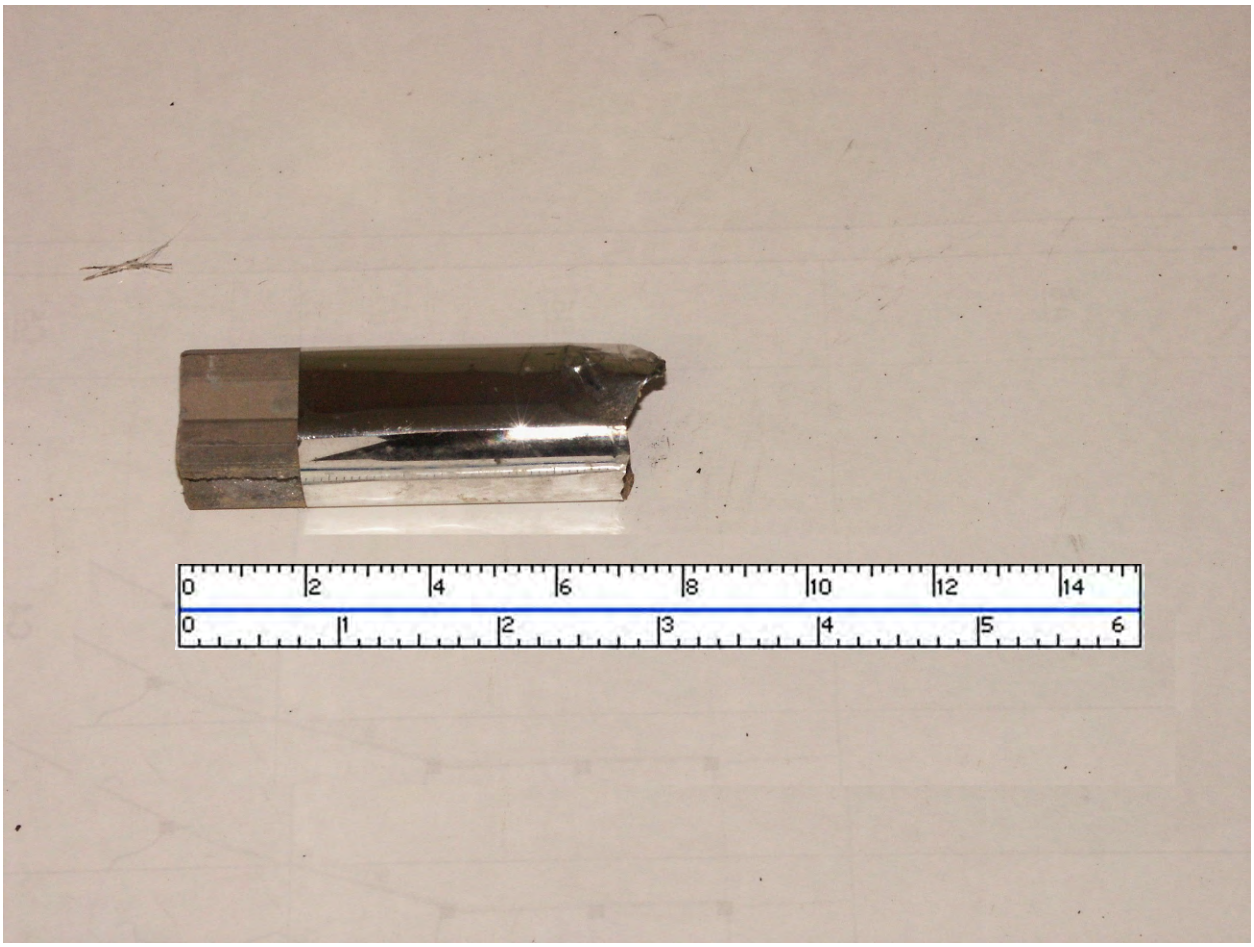

Figure 10. Approximately 40 Percent of an M-206 Flare

The primary environmental message for anyone in the public finding a dud flare (an extremely unlikely event) is: mark its location but do not touch it. The likelihood of finding a dud flare is extremely remote, and the likelihood of a dud flare igniting is even more remote, but because there would be dud flares on the ground under the airspace, someone has the potential to come upon one. The message is: do not touch it; tell an authority about its location.

The number of dud flares on the ground is few. If a dud flare fell in a water body, it would deteriorate over time. The chemicals released during deterioration would not be expected to be of sufficient quantity to cause a noticeable reduction in the water quality or impact upon marine resources.

3.4 Flare Emissions

Environmental questions have also been raised regarding flare emissions, including flare ash. Studies on ash components were performed by measuring residual materials after flares were ignited in a furnace (Air Force 1997). Constituents from combustion were identified, and a worst case scenario was estimated to calculate whether flare emissions or flare ash could result in an environmental impact.

The M-206 and MJU-7 A/B do not contain lead although some earlier flares had lead in the firing mechanism, and some flares still contain chromium in the firing mechanism. A statistical model was used to calculate emission concentrations of lead and chromium with the goal of learning what level of flare emissions or ash would be required to achieve toxic levels of lead or chromium. The model calculated that 1.5 million MJU-7 A/B flares would have to be released below an altitude of 400 feet AGL over a 10,000 acre training range before the level of chromium emissions would become a health risk. Approximately 400,000 flares are deployed by Air Combat Command (ACC) aircraft in all ACC training airspace approved for defensive flare training (Air Force 1997). No location has the combination of flare numbers, altitude, and range area. The number of flares is smaller, the minimum release altitude is higher, and the training area is substantially larger. Flare emissions are not now, nor is it feasible that they could become, a health hazard (Air Force 1997).

There are also trace elements of boron in the flare pellet. To achieve a toxic level of boron, flare ash from approximately 4,000 flares would annually need to fall on an acre of land. It would be almost impossible to deposit 4,000 flares on one acre of land. In fact, it would not be possible for a high performance military aircraft to purposefully deposit even one flare on a specific acre of land. Flare emissions and flare ash are not likely to result in measurable air quality or physical effects to the environment.

3.5 Flare Residual Materials

Environmental questions have been raised regarding flare materials which are not consumed during the flare burn and which are deposited on the surface following flare deployment. Table 6 presents the residual materials from representative flares used in PRTC training airspace.

Residual materials identified as MJU-7 wrapping materials are included in Figure 11 with a pen for scale. This is believed to be the wrapping from an MJU-7 A/B flare and was attributed to training aircraft over private property. Range workers were shown residual flare materials and asked to see if they could find such materials on the range. The workers located a variety of residual materials including the materials pictured in Figures 10, 12, and 13. Figure 12 is the piston or nylon slider assembly from an M-206 flare. The M-206 is a parasitic flare where ignition occurs as the flare is discharged. The burn occurs very quickly and parts, such as portion of the wrapping material, may not be consumed. Wrapping material is not a risk, but it can be viewed as a piece of unanticipated debris by anyone finding it on public or private land under airspace assessed for flare use.

Table 6. Residual Material Deposited on the Surface Following Deployment of One Flare

	FLARE TYPE			
Material	***M-206***	***MJU-7/B***	***MJU-10/B***	***MJU-23/B***
End Cap	One 1 inch x 1 inch x 1/4 inch plastic or nylon	One 2 inch x 1 inch x 1/4 inch plastic or nylon	One 2 inch x 2 inch x 1/4 inch plastic or nylon	One 2 3/4 inch diameter x 1/4 inch thick round plastic disc
Piston	One 1 inch x 1 inch x 1/2 inch plastic or nylon	One 2 inch x 1 inch x 1/2 inch plastic or nylon	One 2 inch x 2 inch x 1/2 inch plastic or nylon	One approximately 2 3/4 inch diameter x 1/2 inch aluminum (or plastic) piston
Spacer	One or two 1 inch x 1 inch felt	One or two 2 inch x 1 inch felt	One or two 2 inch x 2 inch felt	One 1/2 inch thick x 2 3/4 inch diameter rubber shock absorber sealant, two (1/8 inch x 2 3/4 inch diameter) felt discs, up to four 1 inch x 10 inch felt strips
Wrapping	One up to 2 inch x 17 inch piece of aluminum-coated stiff duct-tape type material	One up to 3 inch x 17 inch piece of aluminum-coated stiff duct-tape type material	One up to 4 inch x 17 inch piece of aluminum-coated stiff duct-tape type material	One up to 4 1/2 inch x 20 inch piece of aluminum-coated stiff duct-tape type material
S&I Device	N/A	One 2 inch x 1 inch x 1/2 inch nylon and plastic spring device	One 2 inch x 1 inch x 1/2 inch nylon and plastic spring device	One 2 inch x 1 inch x 1/2 inch nylon and plastic spring device

Figure 11. MJU-7 Residual Flare Wrapping Materials

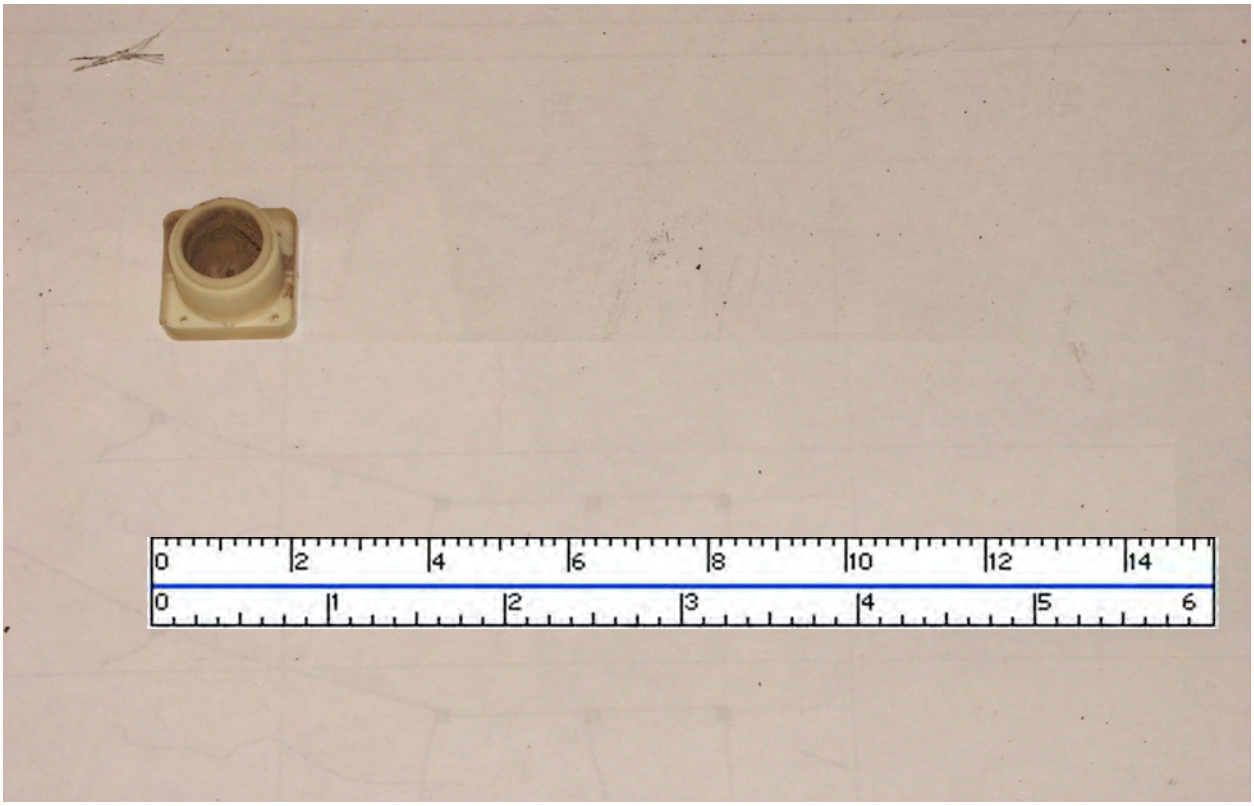

Figure 12. M-206 Piston

The weight of flare residual materials is of interest to assess whether the materials represent a safety risk. Weights of residual components for representative flares are presented in Table 7. The M-206 piston and felt cushion together weigh approximately 0.06 ounces. The M-206 and MJU-7 A/B wrapping materials have a high surface-to-weight ratio and do not fall with much force. The heaviest residual component is the S&I device used in several flares (Table 6). Each S&I device weighs about .07 to .08 ounces depending upon material which may be melted to the S&I device. Two S&I devices are pictured in Figure 13 with some melted fibers from the wrapping material attached.

Table 7. M-206 and MJU-7 A/B Component Weights

Component	***Weight***
M-206	
Plastic end cap	0.08896 ounces
Piston and cushion assembly	0.06271 ounces
Felt spacer	0.01896 ounces
Wrapper (2 inches x 13 inches)	0.3135 ounces
MJU-7 A/B	
End cap	0.10500 ounces
S&I Device (clean)	0.6606 ounces
Piston	0.10500 ounces
Felt spacer	0.01604 ounces
Wrapper (3 inches x 13 inches)	0.4696 ounces

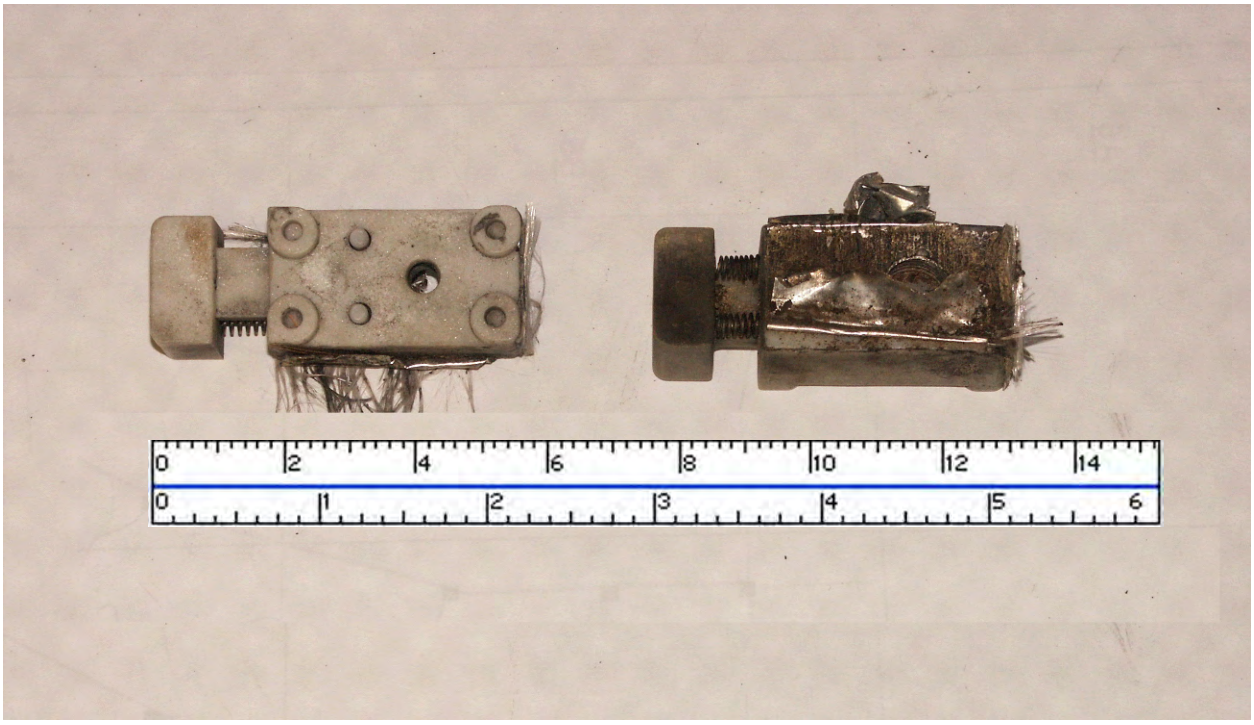

Figure 13. Two S&I Devices Used in MJU-10/B, and Other Flare Types

Calculations were made that take into consideration the weight and surface area of the S&I device. At gravitational rates of acceleration, an S&I device could strike the ground at a momentum of from 0.08 to 0.16 pounds per second (see Table 8). By comparison, if an element with a momentum of 0.1 pounds per second were to strike an individual's unprotected head, there is a one percent possibility of a concussion (Air Force 1997). This means that if an S&I device struck an unprotected individual with no hat, it could cause injury comparable to that of a marble-sized hailstone.

Table 8. MJU-7 A/B Component Hazard

	Maximum Surface Area		
Component	***Area (in^2)***	***Terminal Velocity (ft/sec)***	***Momentum (lb-sec)***
S&I Device	1.65	58	0.08
Piston	1.65	23	0.005
End Caps	2.0	21	0.005
	Minimum Surface Area		
S&I Device	0.413	115	0.16
Piston	0.413	46	0.01
End Caps	0.125	84	0.02

Table 9 quantifies how often an S&I device could be expected to strike a structure, a vehicle, or a person. The assumptions behind this table are that approximately 2,000 MJU-7 A/B-type flares would be annually deployed over an area of 2,000 square miles with a population of one person per square mile. Based on studies performed in the U.S., individuals were, in aggregate, out of doors and

unprotected, with no hat, approximately 10 percent of the time (Tennessee Valley Authority 2003, Klepeis *et al.* 2001). Other assumptions are 2.7 persons per family and 2 structures plus 2 vehicles per family. In an area with one person per square mile and these assumptions, there would be an expected structure hit once in 13 years by a hailstone-sized S&I device under the airspace where MJU-7 A/B flares were used for training. No damage would be expected to the structures.

Table 9. S&I Device Potential Annual Strikes

Persons Per Square Mile	*Structure*	*Vehicle*	*Person*
0.1	.0075	0.00005	0.0000025
1.0	.075	0.0005	0.000025
10.0	.75	0.005	0.00025

Table 9 can be used to calculate other population densities and other exposures of a population. For example, if there were a population of one person per square mile with all individuals unprotected one hundred percent of the time (living out of doors with no hat or 10 times the table), there would be an expected 0.00025 person struck by an S&I device annually or one person in 4,000 years. These results demonstrate that it is very unlikely that an individual could be struck by one of these objects with the force of a large hailstone, and if a person were struck on an unprotected head, there would be an approximately one percent chance of a concussion.

Some of the flare materials which fall to the surface after deployment are larger than an S&I device. Table 6 lists larger pieces from the MJU-10/B and MJU-23/B flares, including the end caps and wrapping. The surface to mass ratio of most of these pieces would not be expected to permit the pieces to achieve a terminal velocity as great as the S&I device. Some parts, such as the ALA-17A/B flare debris include the entire bottom cylinder assembly, as well as the end cap and felt spacers from the top flare. The debris from an ALA-17A/B flare could fall in an orientation that the terminal velocity could produce a momentum in the 0.10 to 0.20 range. The relative low use of these flares reduces potential risk from the bottom cylinder assembly. ACC units are estimated to annually use fewer than 4,000 of these flares worldwide.

End caps, felt spacers, sliders, and wrapping material fall to the earth with each flare deployed. Most flare types have a plastic S&I device which falls to the ground. These dropped objects are extremely unlikely to pose a risk of injury or environmental damage, but the materials would fall to the ground under airspace where such flares are used in training. Figure 14 is an example of an M-206 flare wrapper on the ground. To the untrained eye, as the wrapping material weathers, the wrapper may have the appearance of a natural object, such as the stick in the foreground. However, individuals finding and identifying these pieces could express annoyance with the residual flare materials.

Figure 14. A Flare Wrapper Partially Covered by Pine Needles.

4.0 FLARE CONCLUSIONS

Section 2.0 describes typical flares used regularly or intermittently in PRTC-scheduled training airspace. The environmental consequences of realistic military training with flares can be summarized as:

- The risk of a fire can be greatly reduced through adjusting the minimum altitude for deployment of self-protection flares. There is still the possibility of a mistake where a flare could be deployed at too low an altitude, but establishing minimum altitudes substantially reduces the potential for that mistake or for a flare-caused fire in the environment.
- Dud flares are infrequent with today's technology. The important environmental piece of information for dud flares is that, if one is found, it should be left where it is, its location should be marked, and authorities should be notified. Environmental analyses could explain that the risk from a falling dud flare striking anything is so low as to be inconsequential. If a dud flare were found, it should not be moved and an authority should be notified.
- There is almost no discernible trace from flare ash. A burning flare can be seen, but there is almost no detectable air or soils pollution that could come from the number of flares burned within a training airspace.
- Residual materials from the M-206, the MJU-7 A/B, MJU-10/B, ALA-17/C, or MJU-23 A/B flares have very little safety risk. Flare debris would have little environmental effect except that it could be an annoyance if found.

5.0 REFERENCES

Global Security. 2008. ALA-17 Flare Cartridge.
http://www.globalsecurity.org/military/systems/aircraft/systems/ala-17.htm

Tennessee Valley Authority. 2003. On the Air, Technical Notes on Important Air Quality Issues, Outdoor Ozone Monitors Over-Estimate Actual Human Ozone Exposure.
http://www.tva.gov/environment/air/ontheair/pdf/outdoor.pdf

United States Air Force (Air Force). 1997. Environmental Effects of Self-protection Chaff and Flares: Final Report. Prepared for Headquarters Air Combat Command, Langley AFB, VA.